**Aim** : Study of characteristics of an n-p-n bipolar junction transistor (BJT).

**Electronic Parts Required** :

(i) Power supply, 2 Nos : 0 ~ 15 V
(ii) $R_B$ , $R_C$ = 1.0 KΩ , 2 Nos
(iii) $R_B$ , = 220 Ω , 1 Nos
(iv) 1.0 kΩ Potentio-meter, 1.0 W
(v) NPN Transistor = 1 No , CL 100 / SL 100 [CK 100 / SK 100 = PNP (equivalent) transistors]
(vi) Breadboard = 1 No
(vii) Two DT-830D multi-meters for current measurements. One 8007 multimeter with probe for Voltage measurements.
(viii) single stand wires = 6 Nos

**Theory** :

A transistor is an electronic device which has huge applications – in amplifiers, oscillators, gates etc. In this lab we will study one kind of transistor – the **Bipolar Junction Transistor** (BJT). This device can be thought of schematically as a sandwitch – in which two *n* type semiconductors are separated by a *p* type semiconductor (this is the *npn* transistor – there is another kind – the *pnp*). Of the two *n* type regions, one is small and very heavily doped – called the **emitter**, while the other, called the **collector**, is large and comparatively lightly doped. The *p* type region, called the **base**, is very narrow and very lightly doped.

Thus, there are two *pn* junctions in a transistor – the base-emitter and the collector-base. When the transistor is used as an amplifier it is necessary to forward bias the base-emitter and reverse the collector-base junction. In this case, the base-emitter forward bias causes a large flow of electrons from the emitter to the base (there is also flow of holes from the base to the emitter – but that is much smaller, the base being lightly doped). Once these electrons enter the emitter, the base-collector reverse bias sweeps them almost entirely into the collector. Only a small fraction recombines in the base – giving rise to a small base current $I_B$. Thus the collector current IC is almost equal to or slightly lower than $I_E$.

Now we define a parameter α by

$$I_C = \alpha I_E$$

Where α is a number very close to, but smaller than, 1. Since $I_E = I_C + I_B$

We can easily see that $I_C = \beta I_B$ , where $\boldsymbol{\beta} = \frac{\alpha}{1-\alpha}$ is usually quite large – in the order of 100 -200.

## <u>Characteristics of Common Emitter Connection</u> :

Since two terminals each are needed for a transistor's input and output, while it has only three – one terminal must be common between the input and the output. This leads to the classification of transistor circuits as common emitter (CE), common base (CB) or common collector (CC). We will study the common emitter configuration where the input is applied between the base and the emitter and the output is taken between the collector and the emitter.

The important characteristics of CE arrangement are the *input* and *output* characteristics. In the CE configuration the input current and voltage are $I_B$ and $V_{BE}$, while the output current and voltage are $I_C$ and $V_{CE}$.

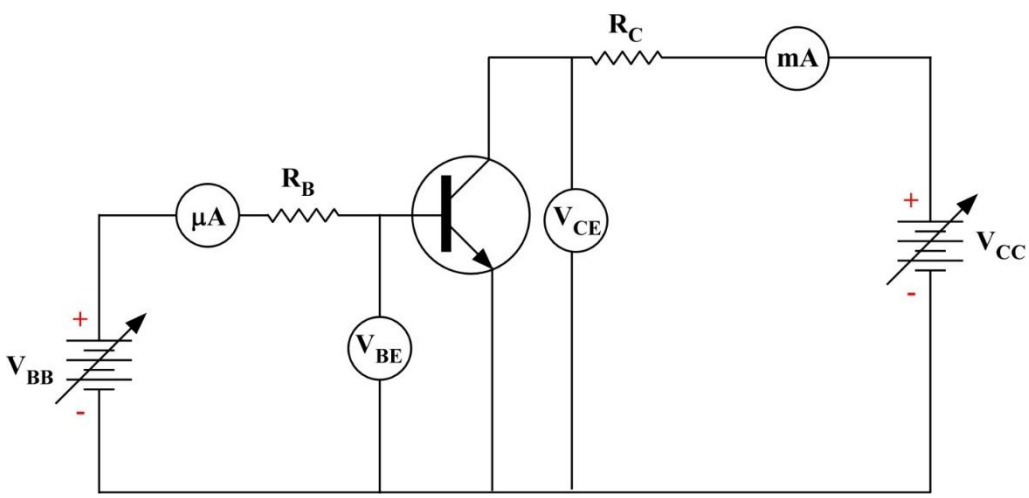


Figure: Circuit for transistor characteristics

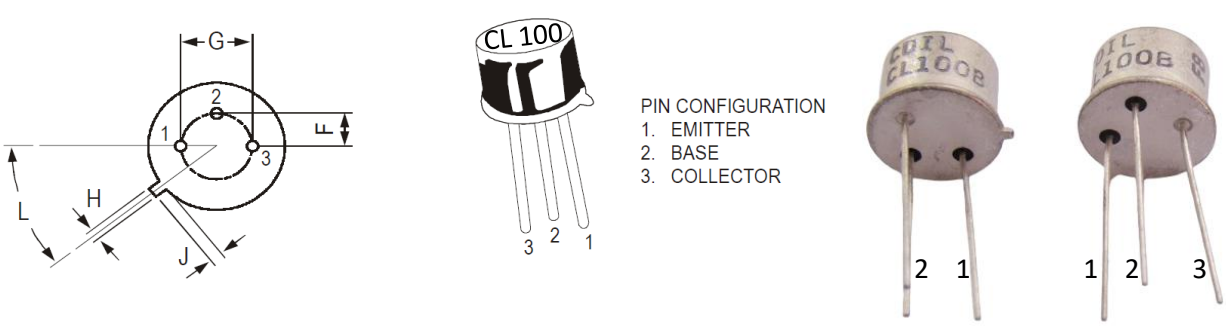

**i) CE input characteristics :**

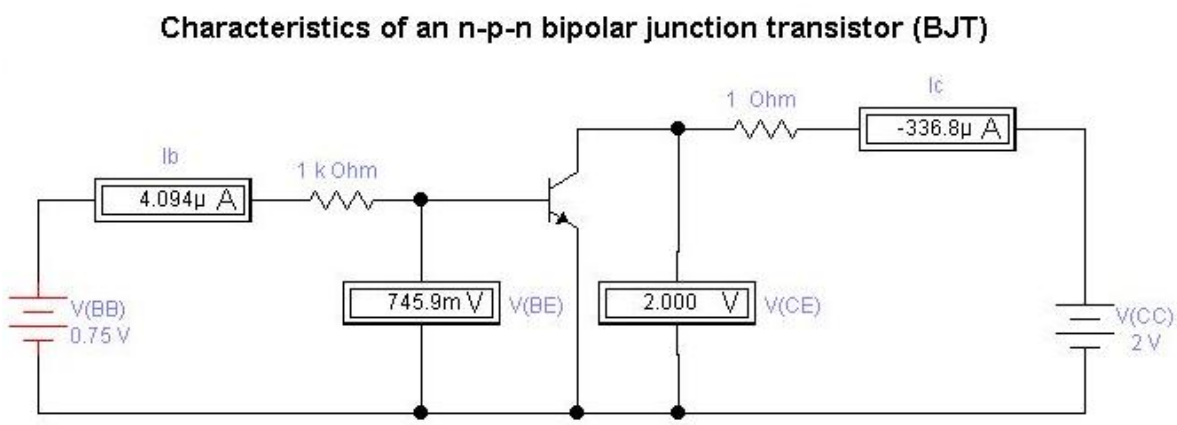


| R_B = 1K Ohm, R_C = 1 Ohm , V_CE = 2 V | | | | | | |
|---|---|---|---|---|---|---|
| Sl. No | V_BB (V) | V_BE (V) | I_b (micro) | V_CC (V) | V_CE (V) | I_c (micro) |
| 1 | 0 | 0 | 0 | 2 | 2 | 2 |
| 2 | 0.1 | 0.999 | 0.1 | 2 | 2 | 2 |
| 3 | 0.2 | 0.1998 | 0.2 | 2 | 2 | 2 |
| 4 | 0.3 | 0.2997 | 0.3 | 2 | 2 | 2 |
| 5 | 0.4 | 0.3996 | 0.4 | 2 | 2 | 2.001 |
| 6 | 0.5 | 0.4995 | 0.5 | 2 | 2 | 2.024 |
| 7 | 0.6 | 0.5994 | 0.611 | 2 | 2 | 3.16 |
| 8 | 0.7 | 0.6988 | 1.24 | 2 | 2 | 56.09 |
| 9 | 0.8 | 0.7844 | 15.61 | 2.001 | 2 | 1.484 mA |
| 10 | 0.9 | 0.8258 | 74.23 | 2.007 | 2 | 7.343 mA |
| 11 | 1 | 0.845 | 155 | 2.015 | 2 | 15.42 mA |
| 12 | 1.1 | 0.8567 | 243.3 | 2.024 | 2 | 24.25 mA |
| 13 | 1.2 | 0.865 | 335 | 2.033 | 2 | 33.42 mA |

It is the curve between base current $I_B$ and base-emitter voltage $V_{BE}$ at constant collector-emitter voltage $V_{CE}$. In the above circuit diagram, set the voltage $V_{CE}$ at 2 Volts. Change the input voltage and measure the variation of $I_B$ with $V_{BE}$. Note that you have to readjust the battery $V_{CC}$ to keep $V_{CE}$ fixed at 2 Volts. Repeat the same for $V_{CE}$ fixed at 3 and 4 Volts.

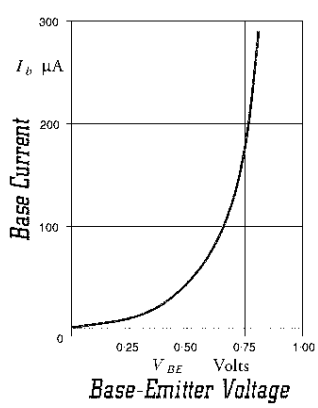


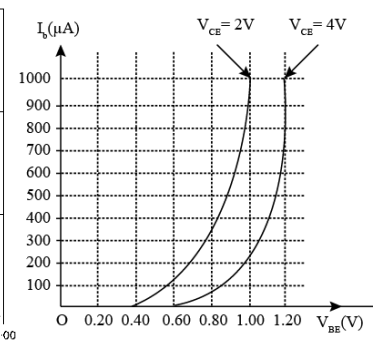

**Table – I**

| Sl. No | $V_{CE}$ = 2 V | | $V_{CE}$ = 3 V | | $V_{CE}$ = 4 V | |
|---|---|---|---|---|---|---|
| | $V_{BE}$ (V) | $I_B$ (μA / mA) | $V_{BE}$ (V) | $I_B$ (μA / mA) | $V_{BE}$ (Volts) | $I_B$ (μA / mA) |
| 1. | | | | | | |
| -- | | | | | | |
| -- | | | | | | |
| 10 | | | | | | |

**ii) CE output characteristics :**

**Characteristics of an n-p-n bipolar junction transistor (BJT)**

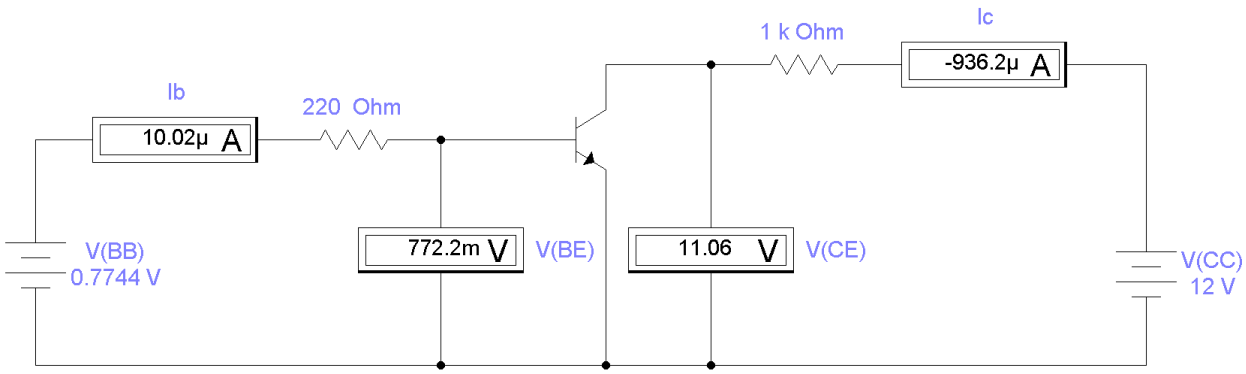


| R_B = 220 Ohm, R_C = 1K Ohm , I_b = 10 micro A | | | | | | |
|---|---|---|---|---|---|---|
| Sl. No | V_BB (V) | V_BE (V) | I_b (micro) | V_CC (V) | V_CE (mV) | I_c (micro) |
| 1 | 0.6618 | 0.6596 | 10.01 | 0 | 6.561 | 6.561 |
| 2 | 0.7058 | 0.7036 | 10.04 | 0.1 | 52.13 | 47.87 |
| 3 | 0.7258 | 0.7236 | 10.06 | 0.2 | 74.51 | 125.5 |
| 4 | 0.7378 | 0.7356 | 10.06 | 0.3 | 89.42 | 210.6 |
| 5 | 0.7462 | 0.744 | 10.03 | 0.4 | 101.3 | 298.7 |
| 6 | 0.7526 | 0.7504 | 9.98 | 0.5 | 112 | 388 |
| 7 | 0.7578 | 0.7556 | 10.02 | 0.6 | 121.7 | 478.3 |
| 8 | 0.7658 | 0.7636 | 10.1 | 0.8 | 142.3 | 657.7 |
| 9 | 0.7715 | 0.7693 | 10.01 | 1 | 174.7 | 825.3 |
| 10 | 0.7743 | 0.7721 | 10.1 | 1.2 | 278.1 | 921.9 |
| 11 | 0.7744 | 0.7722 | 10.02 | 1.5 | 574.3 | 925.7 |
| 12 | 0.7744 | 0.7722 | 10.02 | 1.8 | 874 | 926 |
| 13 | 0.7744 | 0.7722 | 10.02 | 2.1 | 1.274 V | 926.4 |
| 14 | 0.7744 | 0.7722 | 10.02 | 2.5 | 1.573 V | 926.7 |
| 15 | 0.7744 | 0.7722 | 10.02 | 3 | 2.073 V | 927.2 |

| | | | | | | |
|---|---|---|---|---|---|---|
| 16 | 0.7744 | 0.7722 | 10.02 | 5 | 4.071 | 929.2 |
| 17 | 0.7744 | 0.7722 | 10.02 | 8 | 7.068 | 932.2 |
| 18 | 0.7744 | 0.7722 | 10.02 | 12 | 11.06 | 936.2 |

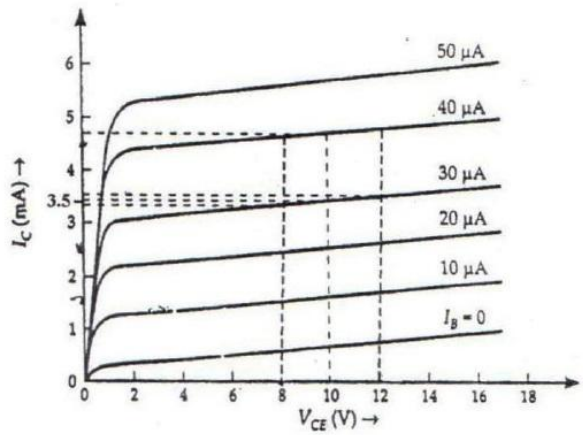


It is the curve between collector current $I_C$ and collector-emitter voltage $V_{CE}$ at constant base current $I_B$. Use the above circuit with $R_B = 220\ \Omega$ and $R_C = 1\ k\Omega$. Adjust $V_{BB}$ to fix the current $I_B$ at 10 μA. Vary the voltage $V_{CE}$ by varying $V_{CC}$ from 0 Volts to 10 Volts and note the values of $I_C$ (ignore the –ve sign due to direction). Note that $I_C$ increases rapidly at small values of $V_{CE} < 0.7$ Volts. Try to take readings at smaller voltage intervals in this region – you can use large intervals (may be bigger steps) once you cross this region and the current stops increasing rapidly. Repeat this for $I_B$ = 20, 30, and 40 μA. In one graph, plot the variation of $I_C$ verses $V_{CE}$ for each successive value of $I_B$. Calculate the value of β at $V_{CE}$ = 5 volts using the formula $\beta = I_C / I_B$ .

**Table – II**

| Sl. No | $I_B$ = 10 μA | | $I_B$ = 20 μA | | $I_B$ = 30 μA | | $I_B$ = 40 μA | |
|---|---|---|---|---|---|---|---|---|
| | $V_{CE}$ (V) | $I_C$ (mA) | $V_{CE}$ (V) | $I_C$ (mA) | $V_{CE}$ (V) | $I_C$ (mA) | $V_{CE}$ (V) | $I_C$ (mA) |
| 1. | | | | | | | | |
| -- | | | | | | | | |
| -- | | | | | | | | |
| 10 | | | | | | | | |

* * *